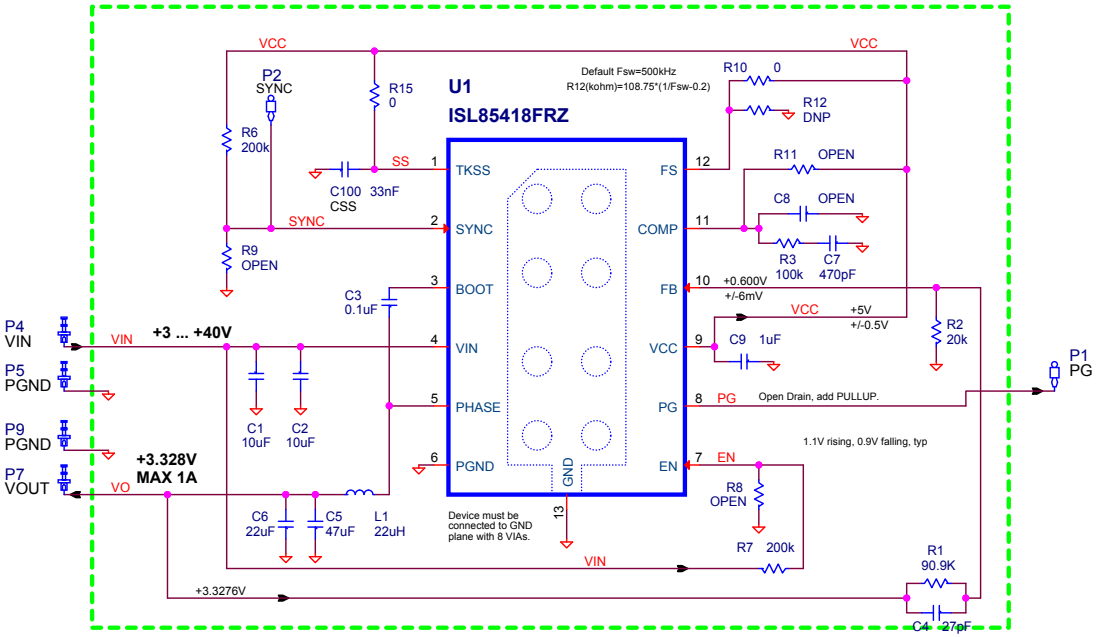

Page Size setup in OrCAD is 8.5 Wx 11H

PROJECT: **ISL85418DEMO1Z board schematic**		intersil INTERSIL CORP. 1001 MURPHY RANCH RD. MILPITAS, CA 95035, USA www.intersil.com
DESIGNED: FAE/CA Review	DATE: 29 / JUL / 2013	
CHECKED: TBD	DATE: DD / MMM / YYYY	
THIS DOCUMENT CONTAINS INFORMATION PROPRIETARY TO INTERSIL CORP. USE OR DISCLOSURE WITHOUT WRITTEN PERMISSION IS EXPRESSLY FORBIDDEN. COPYRIGHT 2013.		LAYOUT REV: N/A ASSEMBLY REV: N/A SCHEMATIC REV: 1.1
LAST MODIFIED: Thursday, March 05, 2015	DOC # : ISL85415-XXX	Sheet 1 OF 1