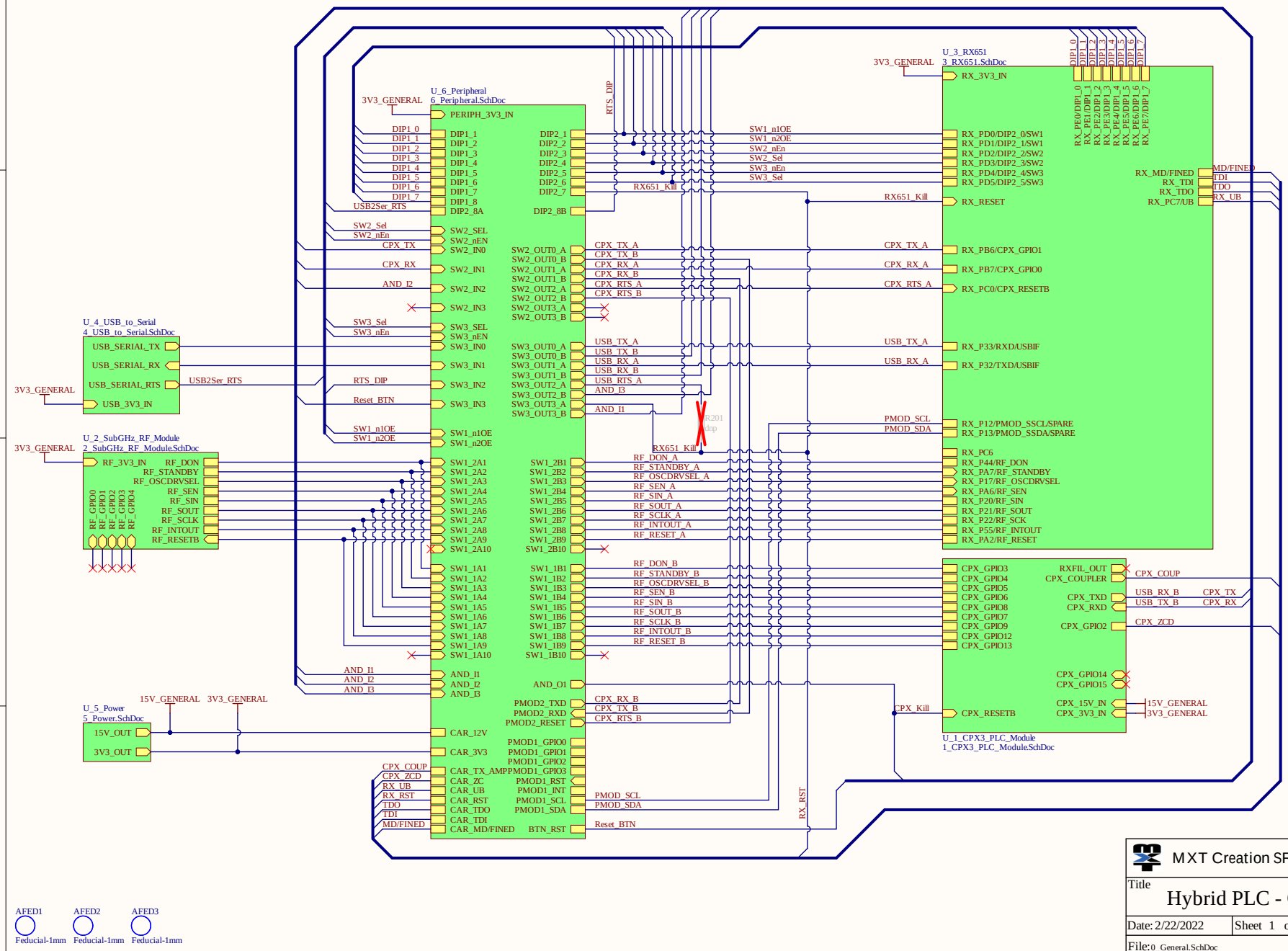

MXT Creation SRL

Title

Hybrid PLC - General Diagram

Date: 2/22/2022	Sheet 1 of 7	Revision 3.0
File: 0_General.SchDoc		Drawn by: Alexandru Ionita

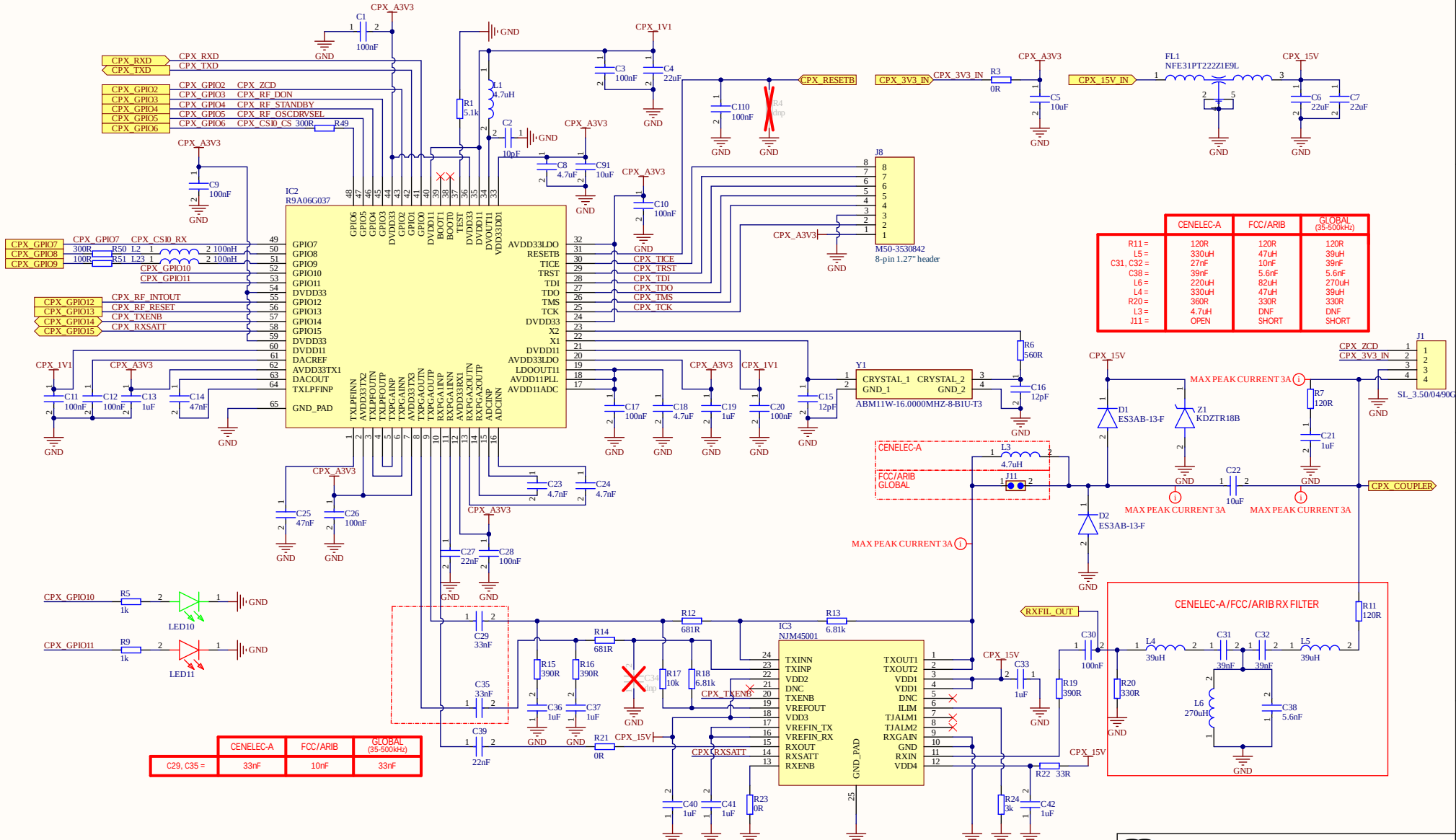

	CENELEC-A	FCC/ARIB	GLOBAL (35-500kHz)
R11 =	120R	120R	120R
L5 =	330uH	47uH	39uH
C31, C32 =	27nF	10nF	39nF
C38 =	39nF	5.6nF	5.6nF
L6 =	220uH	82uH	270uH
L4 =	330uH	47uH	39uH
R20 =	360R	330R	330R
L3 =	4.7uH	DNF	DNF
J11 =	OPEN	SHORT	SHORT

	CENELEC-A	FCC/ARIB	GLOBAL (35-500kHz)
C29, C35 =	33nF	10nF	33nF

MXT Creation SRL

Title: CPX3 PLC Module

Date: 2/22/2022 | Sheet 2 of 7 | Revision 3.0

File: 1_CPX3_PLC_Module.SchDoc | Drawn by: Alexandru Ionita

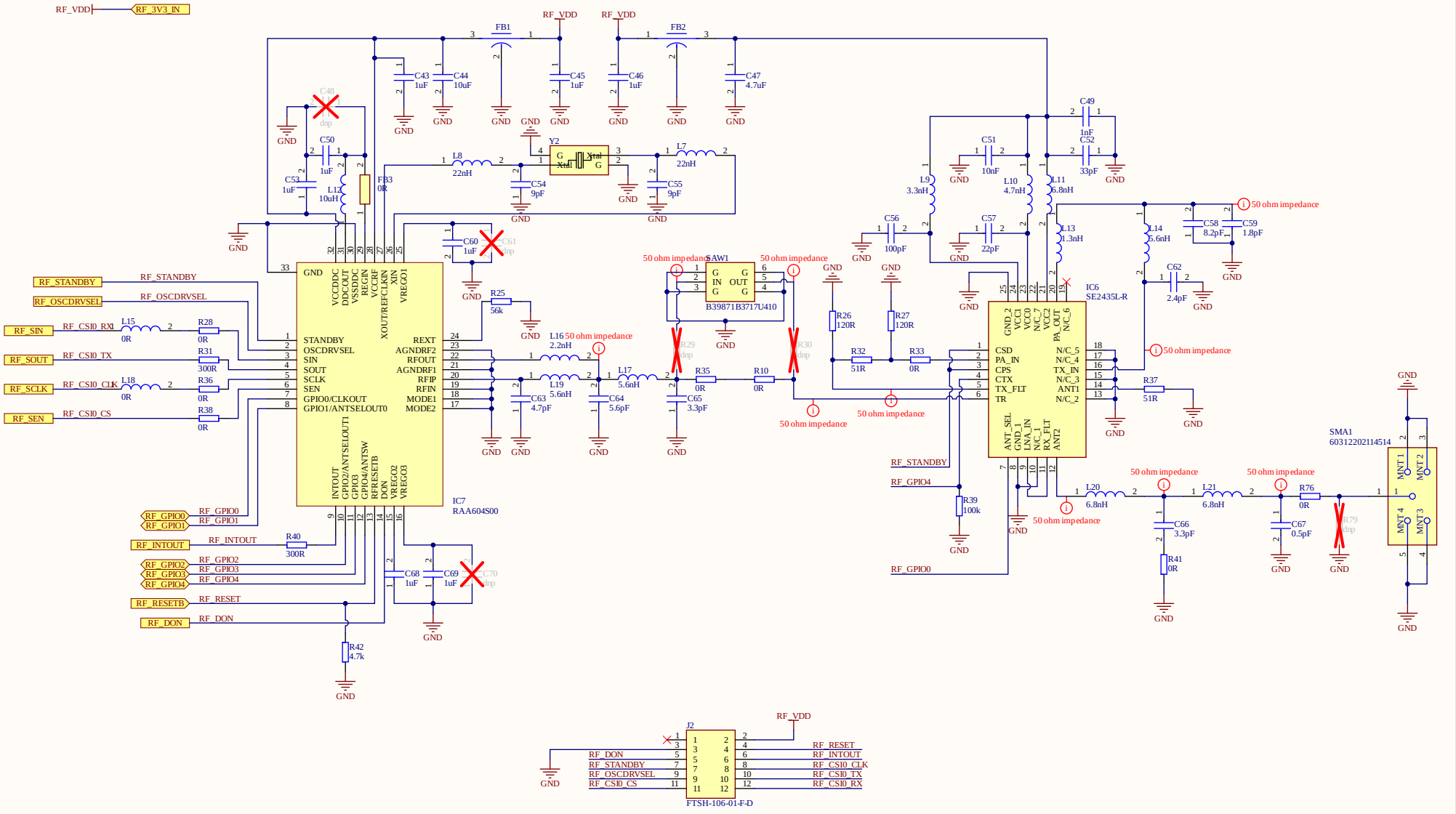

MXT Creation SRL

Title: SubGHz RF Module

Date: 2/22/2022	Sheet 3 of 7	Revision 3.0
File: 2_SubGHz_RF_Module.SchDoc	Drawn by: Alexandru Ionita	

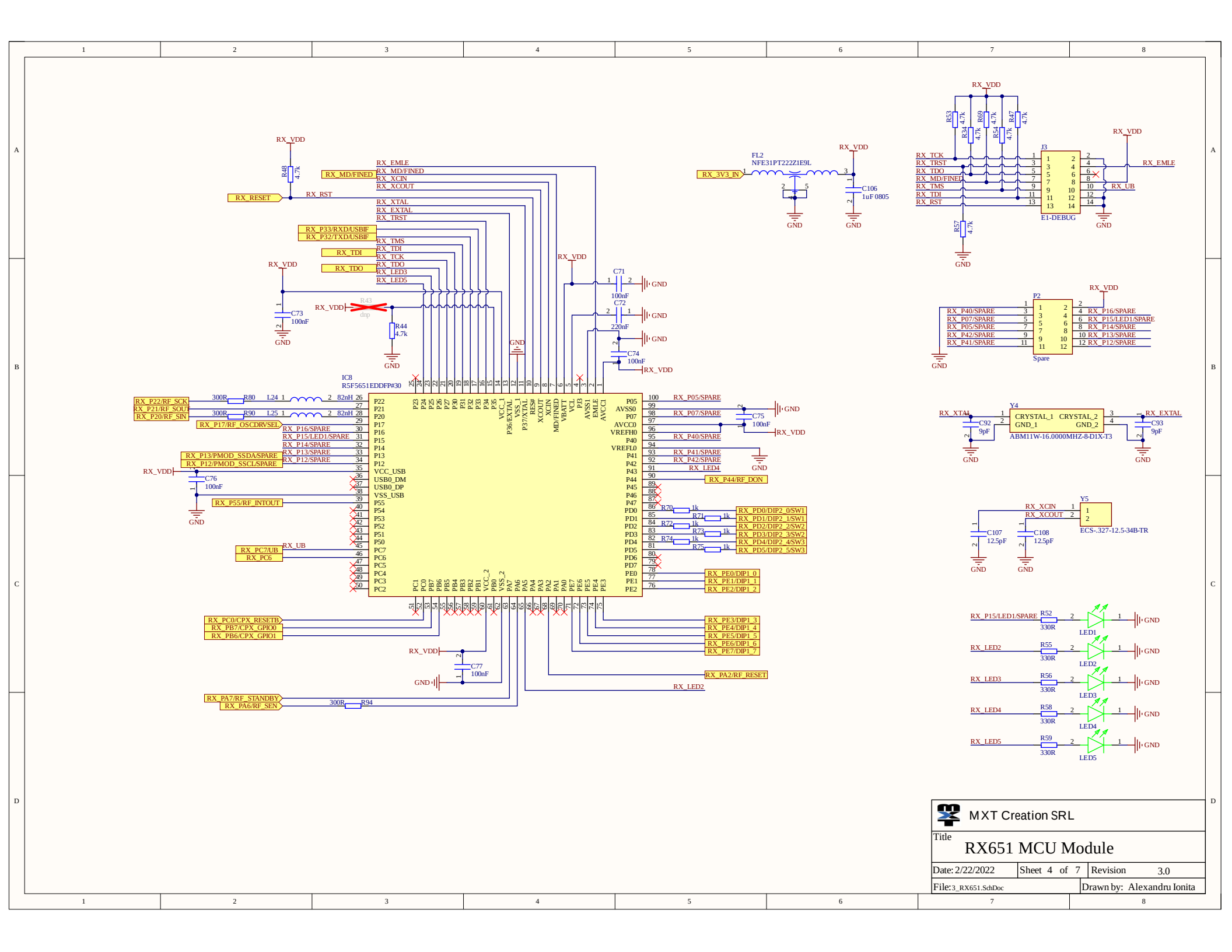

MXT Creation SRL

Title

RX651 MCU Module

Date: 2/22/2022	Sheet 4 of 7	Revision 3.0
File: 3_RX651.SchDoc		Drawn by: Alexandru Ionita

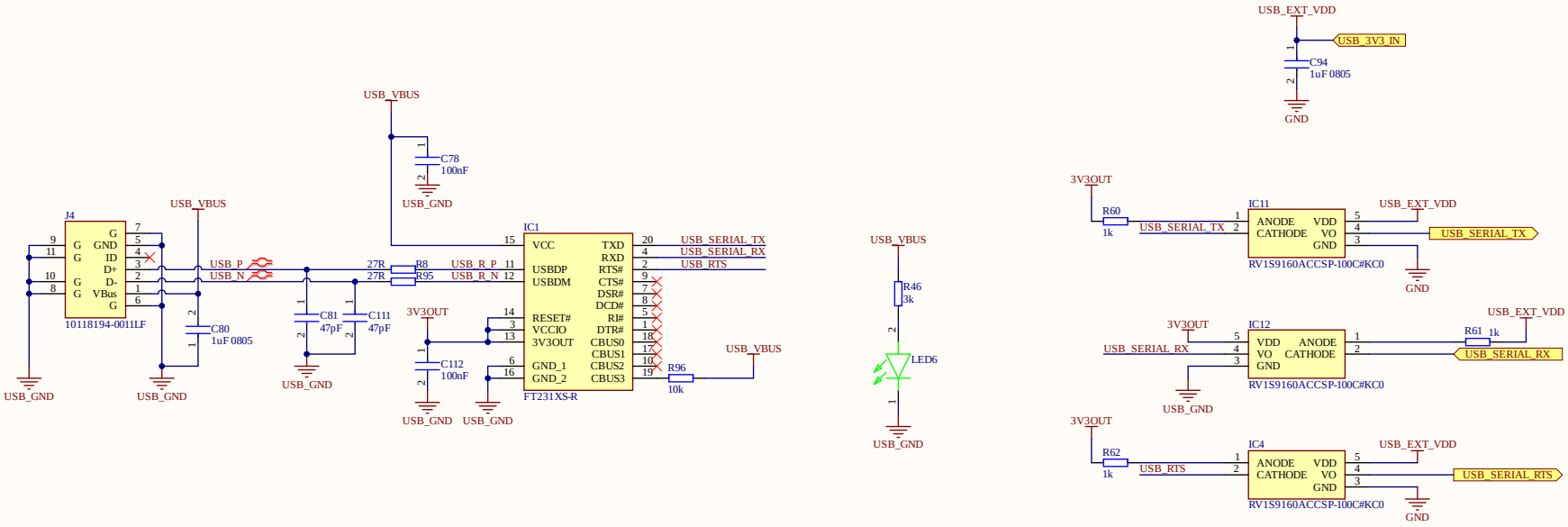

MXT Creation SRL

Title

USB To Serial

Date: 2/22/2022	Sheet 5 of 7	Revision 3.0
File: 4_USB_to_Serial.SchDoc	Drawn by: Alexandru Ionita	

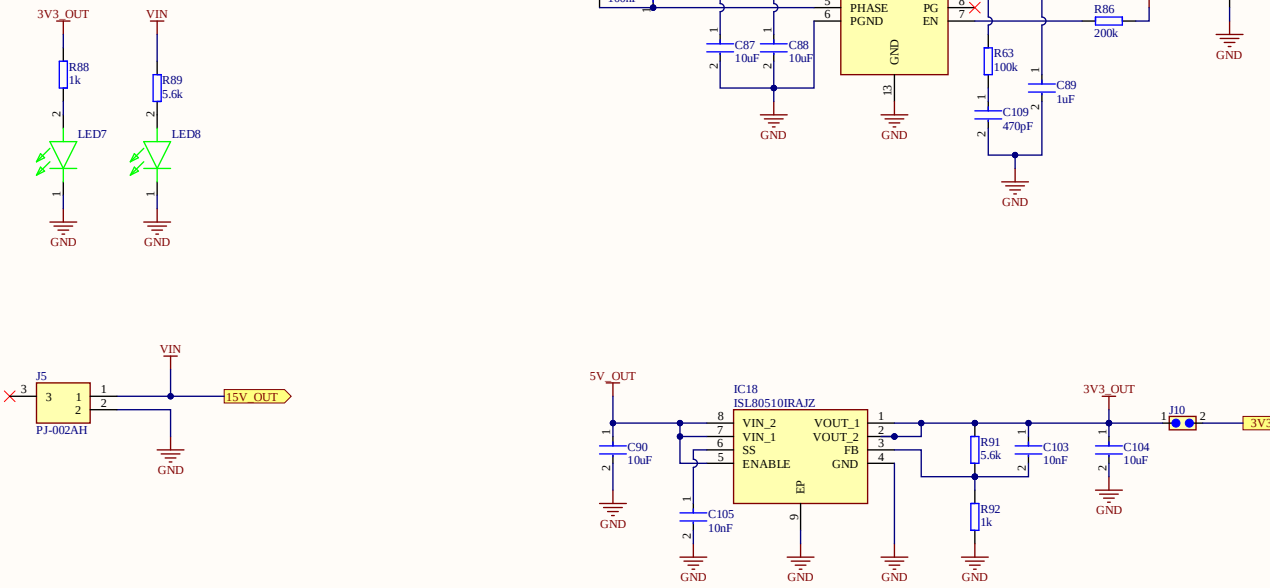

MXT Creation SRL

Title

Power Module

Date: 2/22/2022	Sheet 6 of 7	Revision 3.0
File: 5_Power.SchDoc	Drawn by: Alexandru Ionita	

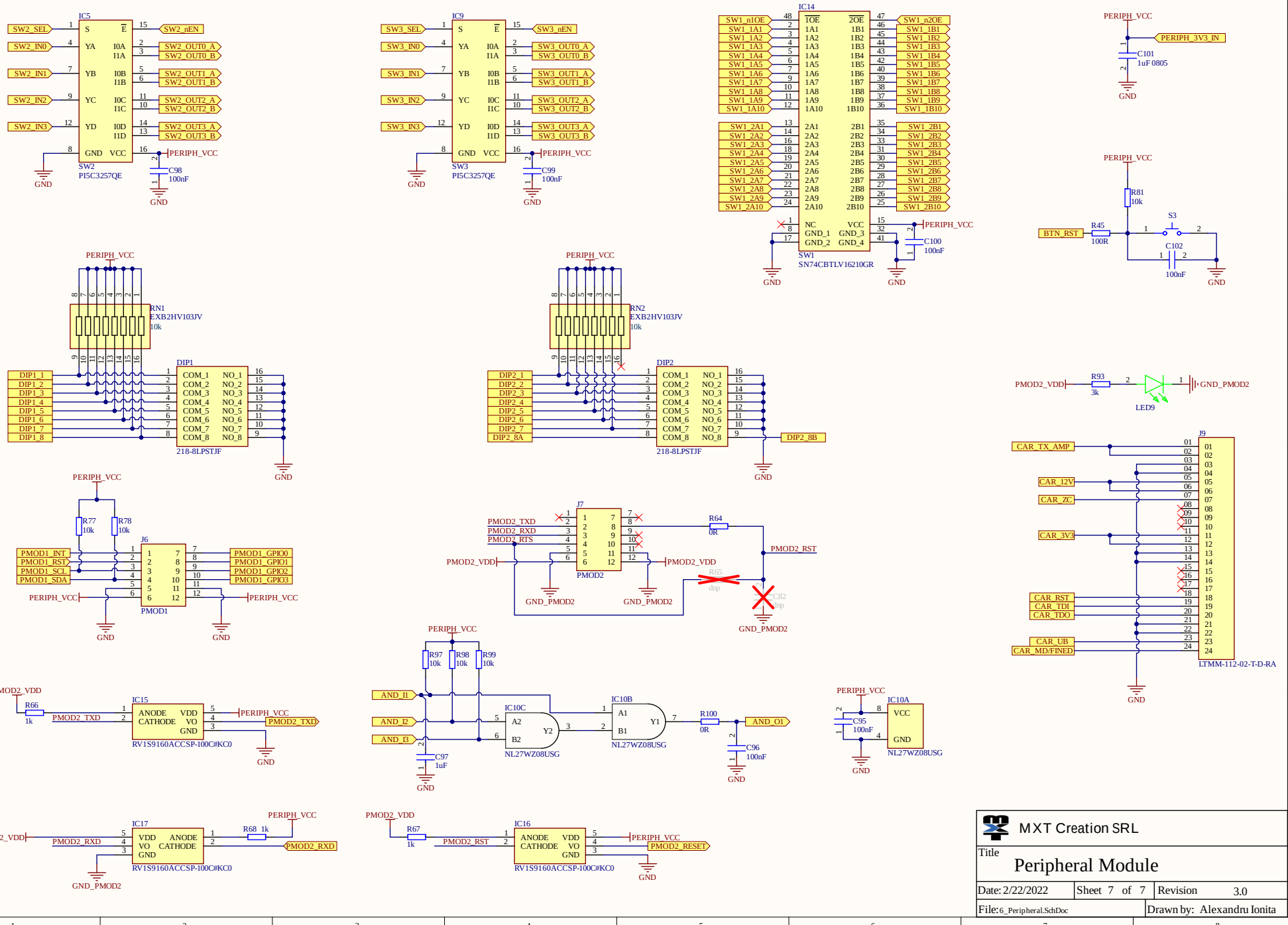

MXT Creation SRL			
Title: Peripheral Module			
Date: 2/22/2022	Sheet 7 of 7	Revision 3.0	
File: 6_Peripheral.SchDoc	Drawn by: Alexandru Ionita		