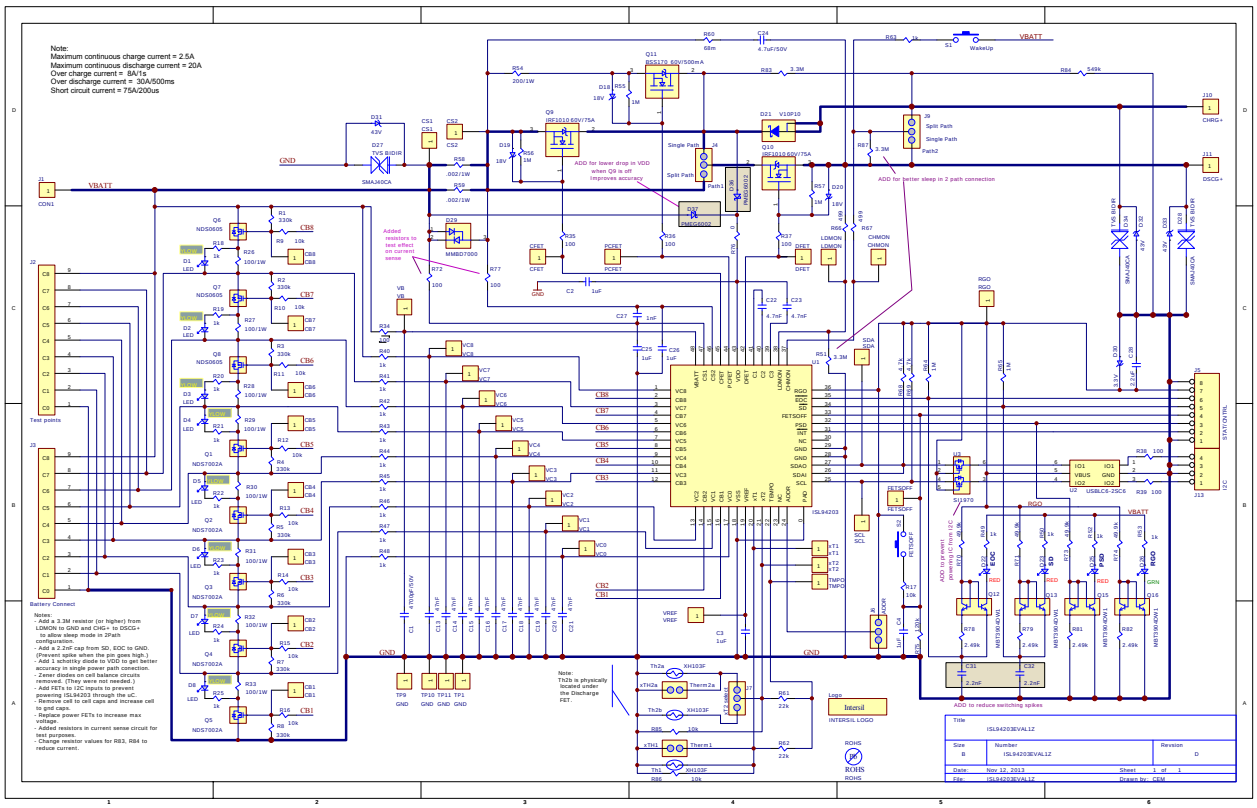
Note:
Maximum continuous charge current = 2.5A
Maximum continuous discharge current = 20A
Over charge current = 8A/1s
Over discharge current = 30A/500ms
Short circuit current = 75A/200us
Battery Connect
Notes:
- Add a 3.3M resistor (or higher) from LOMON to GND and CHG+ to DSCG+ to allow sleep mode in 2Path configuration.
- Add a 2.2nF cap from SD, EOC to GND. (Prevent spike when the pin goes high.)
- Add 1 schottky diode to VDD to get better accuracy in single power path connction.
- Zener diodes on cell balance circuits removed. (They were not needed.)
- Add FETs to I2C inputs to prevent powering ISL94203 through the uC.
- Remove cell to cell caps and increase cell to grid caps.
- Replace power FETs to increase max voltage.
- Added resistors in current sense circuit for test purposes.
- Change resistor values for R83, R84 to reduce current.
Added resistors to test effect on current sense
ADD for lower drop in VDD when Q9 is off improves accuracy
ADD for better sleep in 2 path connection
ADD to reduce switching spikes
ADD to prevent powering IC from I2C
Note: Th2b is physically located under the Discharge FET.
Title
ISL94203EVAL1Z
Size B
Number ISL94203EVAL1Z
Revision D
Date: Nov 12, 2013
Sheet 1 of 1
File: ISL94203EVAL1Z
Drawn by: OEM